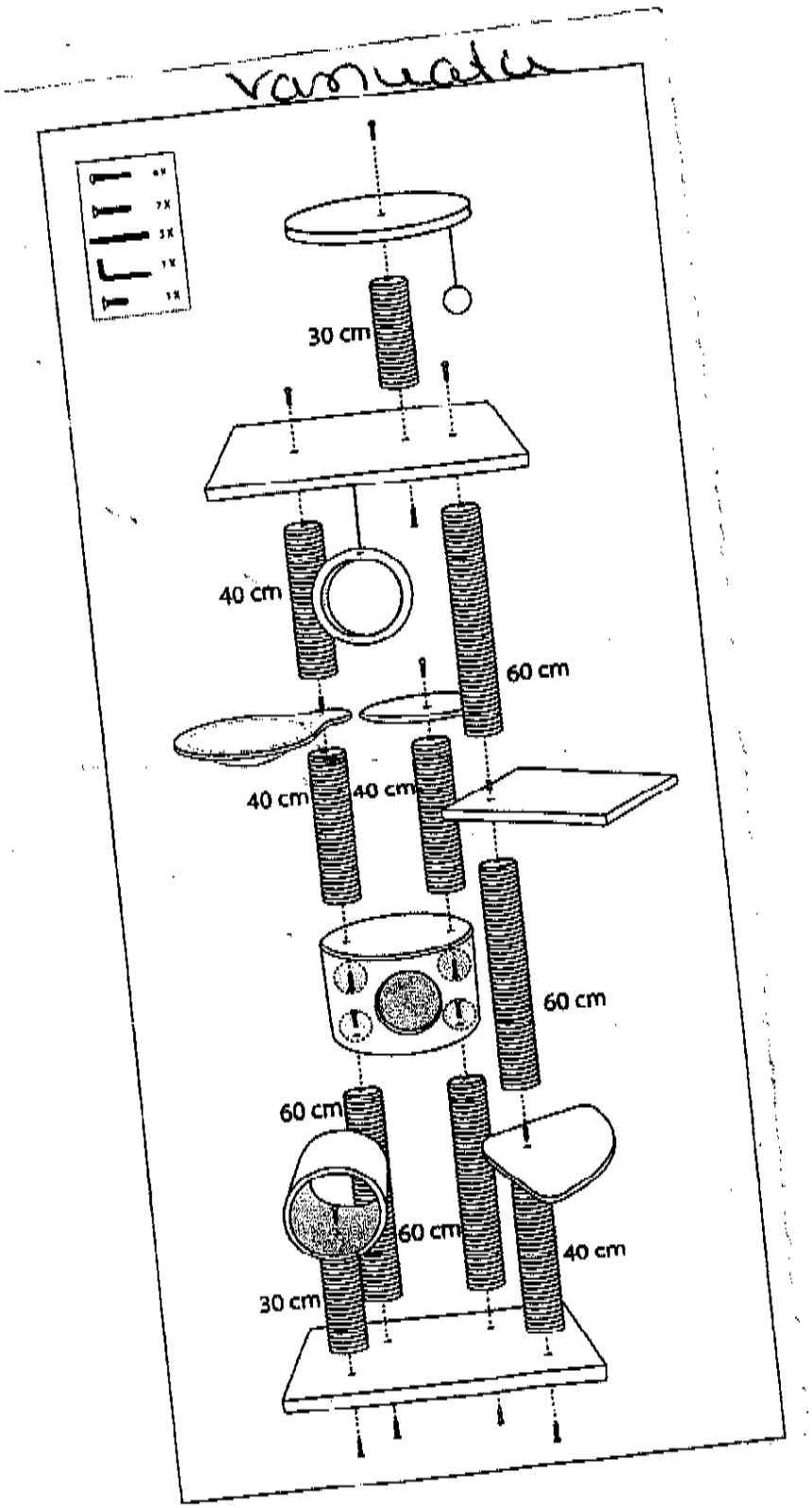
vamuatu
30 cm
40 cm
60 cm
40 cm
40 cm
60 cm
60 cm
60 cm
40 cm
30 cm